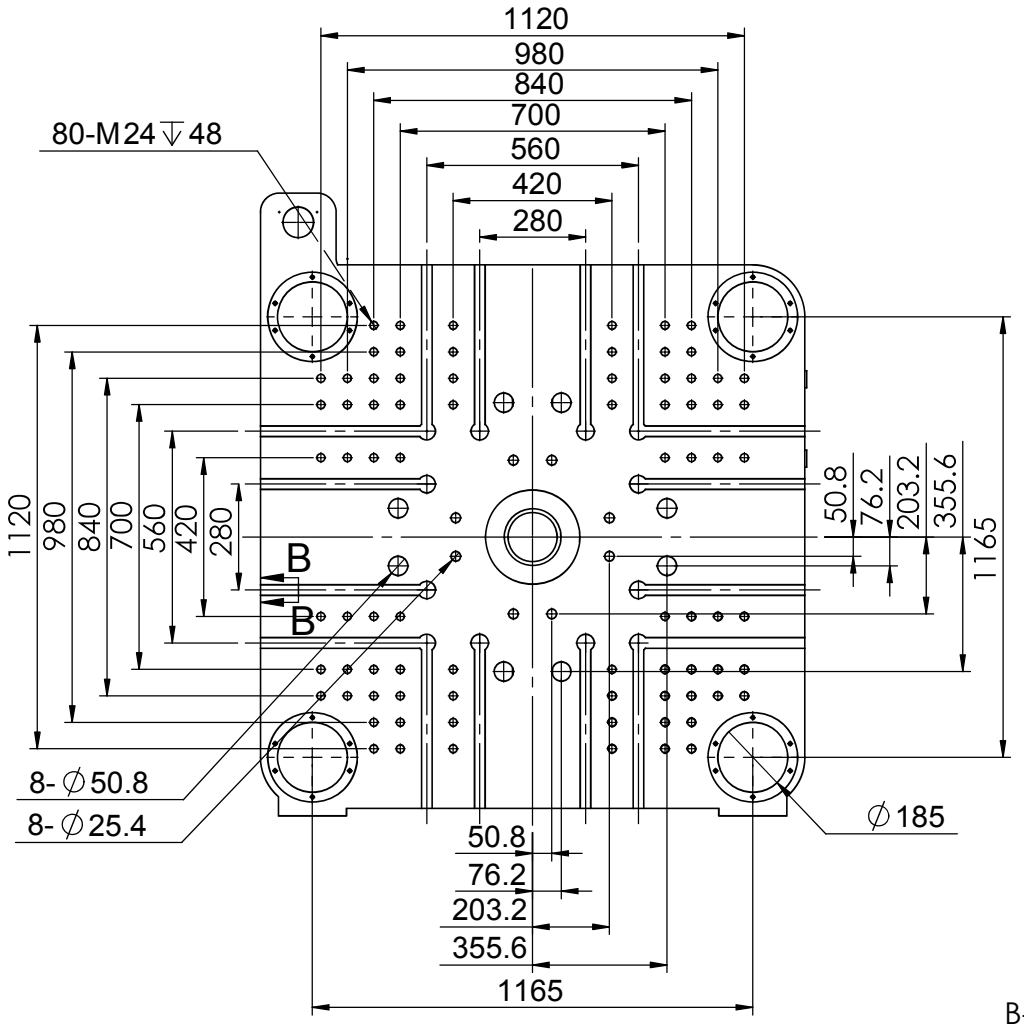
1120
980
840
700
560
420
280
80-M24 ↧ 48
B
B
8-∅50.8
8-∅25.4
∅185
50.8
76.2
203.2
355.6
1165

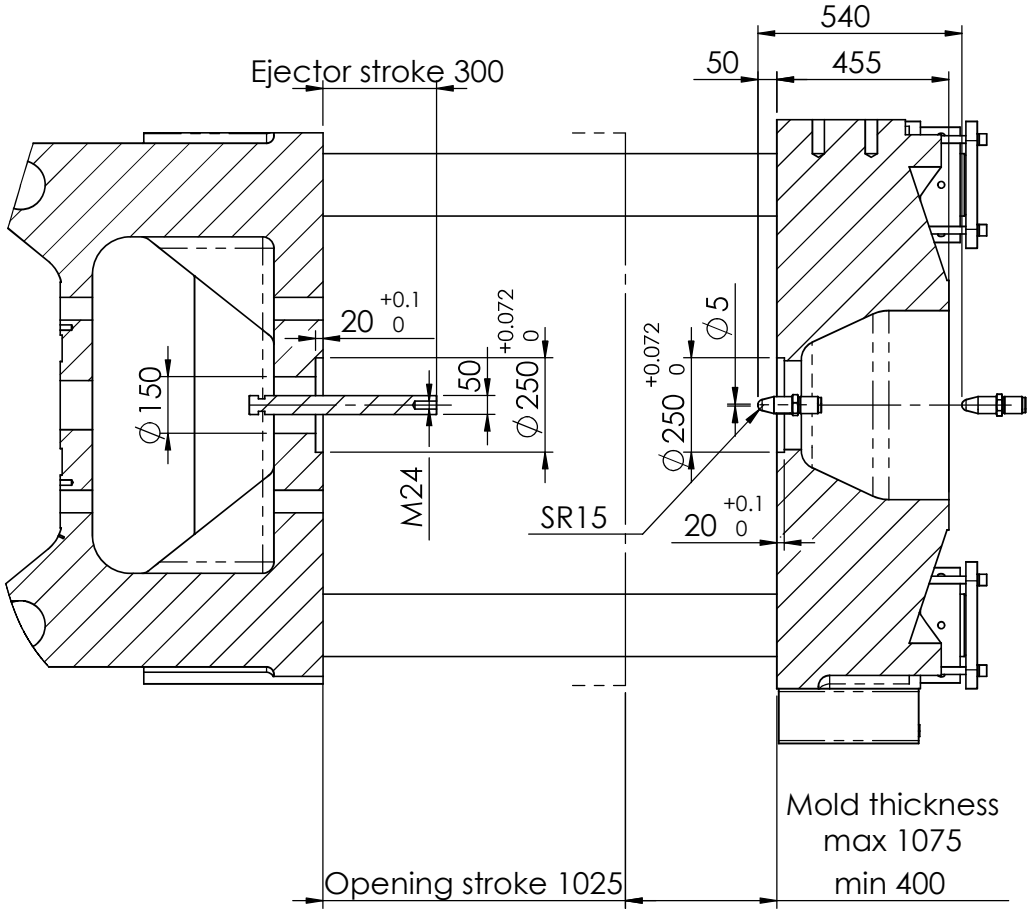
Ejector stroke 300
540
50
455
20 +0.1 0
+0.072 0
∅150
50
∅250
M24
SR15
∅5
∅250
20 +0.1 0
Opening stroke 1025
Mold thickness
max 1075
min 400

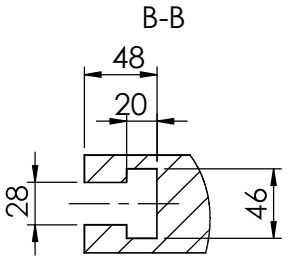
B-B
48
20
28
46

JM800-SVP2